JUNO L 160 (SST + PS) with side glass
Dimensions drawing

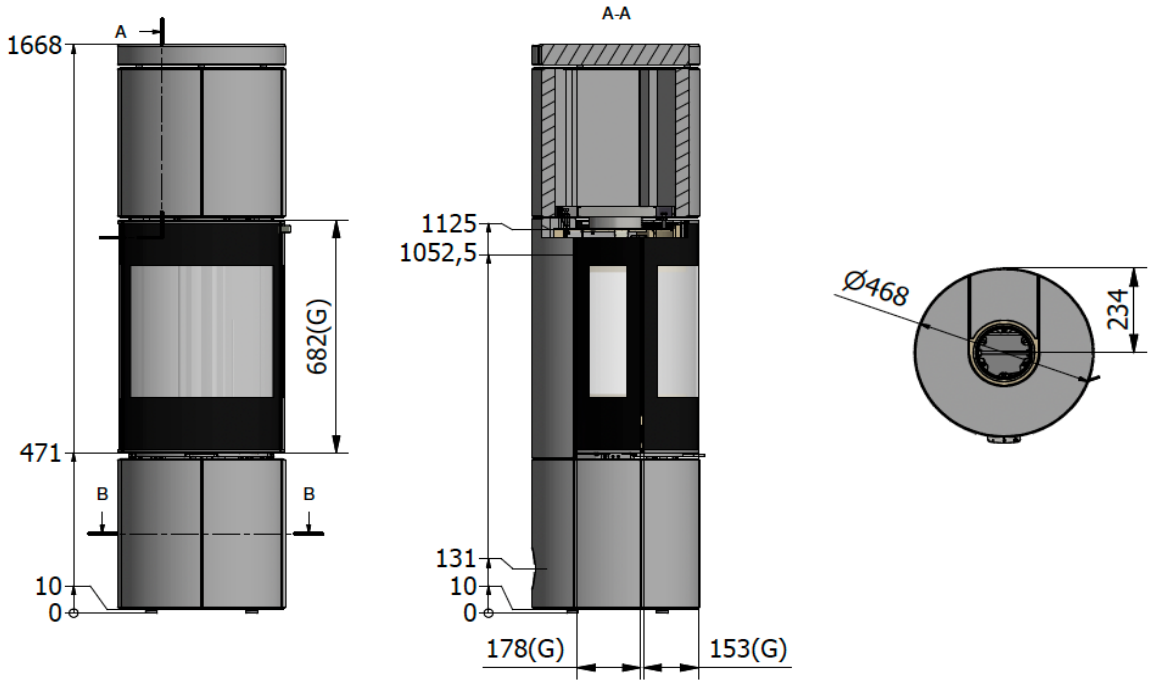

JUNO L 160 (SST + PS) without side glass
Dimensions drawing

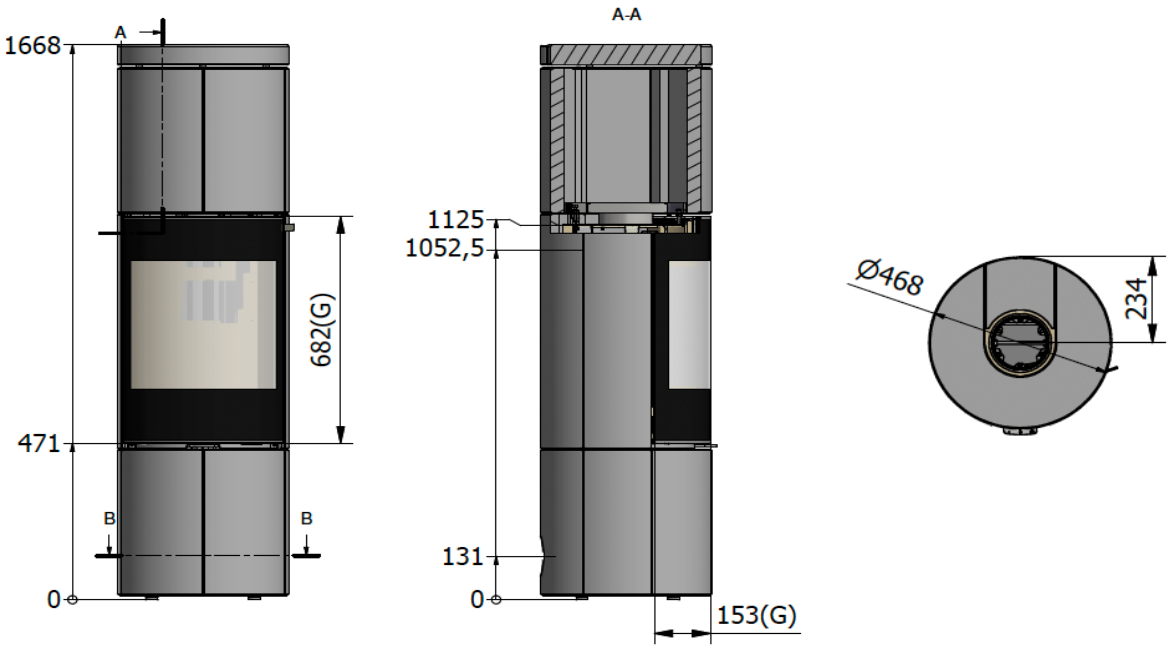

spismiljo.se